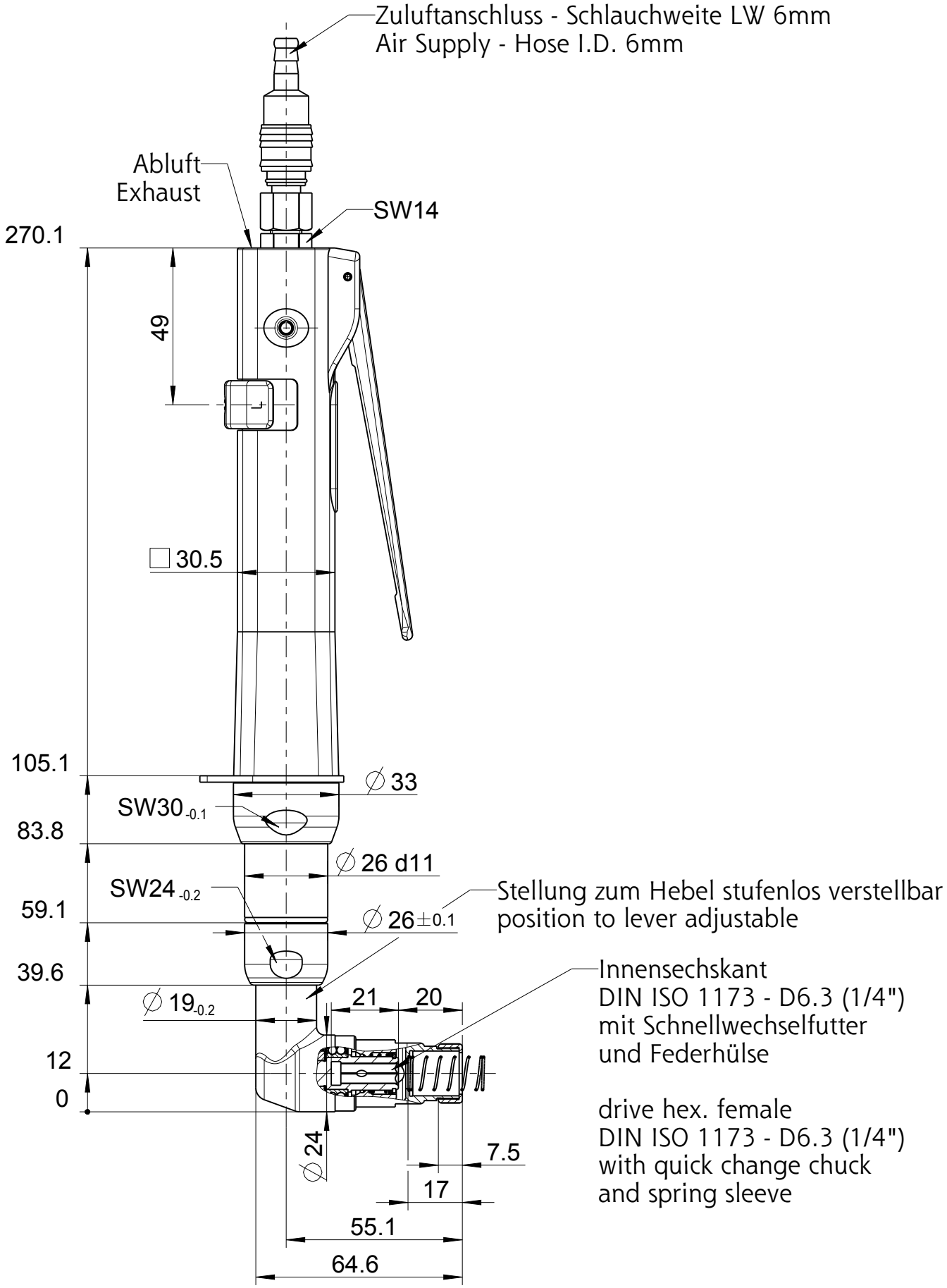

Typ / type	DEPRAG	MASSBLATT / DIMENSION SHEET	
377-X21U-FH-2STUFIG		107063	drw 1.0
			asm 1.0